Characterization FAQ's

General Questions

Q1: What are the steps for submitting a characterization request?

Electrical Characterization Questions

Q3: What software is used for signal integrity simulations?

Q4: What is the current carrying capacity of bondwires?

Q5: What is the current density of solderballs?

Q6: How does wire resistance change as a function of temperature?

Q7: What affect does the mold compound have on transmission lines?

Q8: What numerical analysis technique (s) does Q3D Extractor use?

Q9: How does Maxwell Q3D extract AC Inductance?

Q10: Why are there negative terms in the Q3D Extractor Capacitance Matrix?

Q11: Are Q3D Extractor models valid at high frequencies?

Q12: Why isn't mutual resistance included in the Q3D Extractor electrical modeling reports?

Q13: What is the SPICE equivalent of the lumped, narrowband, simulated circuit?

© 2007 Amkor Technology, Inc.

A1: **1) Requestor submits Characterization request in eSmart**
2) Characterization team sends the requestor a quote
3) Requestor forwards PO to Characterization team
4) Characterization team schedules simulation and notifies requestor of commit completion date via eSmart

A3: **Amkor uses the following signal integrity simulation tools depending on the type of output that is needed:**

- **Resistance, Inductance and Capacitance**
  - *Optimal PakSi-E* – quasi-static electromagnetic simulation tool for full package modeling (http://www.optimalcorp.com/Technology/signal_integrity.htm)
    - Full package RLGC matrices
    - SPICE sub-circuits
    - Full package IBIS models
    - W-element models
  - *Ansoft Q3D Extractor* – 3D/2D quasi-static electromagnetic simulation tool for critical net 3D modeling and 2D transmission lines (http://www.ansoft.com/products/si/q3d_extractor/)
    - RLC matrices
    - SPICE sub-circuits: HSPICE (*.sp), IBIS Package Model (*.pkg), PSpice (*.psp), Spectre (*.ckt), Maxwell Spice Circuit (*.spc), Ansoft Designer (*.cir), Ansoft Simplorer (*.sml), Berkeley SPICE (*.bsp), and Cadence DML (*.dml)
- **S-parameters (Insertion Loss, Return Loss)**
  - *Ansoft HFSS* – for S-parameter and full-wave SPICE extraction and for the electromagnetic simulation of high-frequency and high-speed components (http://www.ansoft.com/products/hf/hfss/)
  - *Sigrity PowerSI* – for fast and accurate full-wave electrical analysis of power and ground systems (http://www.sigrity.com/products/powersi/powersi.htm)
    - Extracts frequency-dependent impedances and/or S-parameters for lossy and lossless signal transmission paths
    - Can be used to create behavorial broadband SPICE models for packages
- **Power Delivery Analysis (PDS)**
  - *Sigrity PowerSI* – for fast and accurate full-wave electrical analysis of power and ground systems (http://www.sigrity.com/products/powersi/powersi.htm)

© 2007 Amkor Technology, Inc.

- Extracts frequency-dependent impedances and/or S-parameters of power and ground systems
- Can be used to create broadband behavorial SPICE models for package PDS
- Broadband models can be used for SSO/SSN simulation
- Computes near DC voltages and current distributions (IR drop)
- Aides in optimizing decoupling capacitor placement

➢ **DC Power Delivery Analysis (PDS)**

- *Sigrity PowerDC* – for fast DC analysis of IR drop for package and board power distribution systems (http://www.sigrity.com/products/powerdc/powerdc.htm)
    - Provide true DC IR drop analysis for the entire package power delivery system

➢ **Other Signal Integrity tools**

- *Cadence SI620* (http://www.cadence.co.in/products/si_pk_bd/apd/index.aspx)
    - Time domain analysis
    - Full package coupled RLC using PakSI 3D engine
    - Impedance
    - Delay
    - Crosstalk
    - Reflection
- *Sigrity Speed2000* (http://www.cadence.co.in/products/si_pk_bd/apd/index.aspx)
    - Time domain analysis
    - Crosstalk
    - Delay
    - Reflection
    - Eye diagrams
    - SSN analysis

© 2007 Amkor Technology, Inc.

A4:

For wirelengths >0.040"		
Wirebond Diameters (mils)	Gold Wire Max. Current (Amps)	Aluminum Wire Max. Current (Amps)
0.70	0.38	0.28
0.80	0.46	0.34
1.00	0.65	0.48
1.20	0.85	0.63
2.00	1.83	1.36

(PER MIL-H-38534)

A5: Current (A) vs. ball diameter (mm) based on IPC chart:

	Ball Diameters (milimeter)					
Temperture Rise	**0.300**	**0.400**	**0.460**	**0.510**	**0.630**	**0.760**
10 C	**3.0**	**4.0**	**5.0**	**6.0**	**8.0**	**10.8**
20 C	**3.8**	**6.0**	**7.1**	**8.4**	**11.5**	**14.5**
30 C	**4.8**	**7.2**	**8.5**	**10.6**	**13.5**	**19.0**
45 C	**5.7**	**8.0**	**10.6**	**12.4**	**16.0**	**22.0**
75 C	**7.2**	**11.0**	**13.0**	**15.0**	**19.0**	**27.0**
100 C	**8.2**	**12.0**	**14.0**	**17.0**	**22.0**	**29.0**

Temperature of the ball will rise with current. The ball current capacity depends on the ball shape after soldering.

© 2007 Amkor Technology, Inc.

A6:

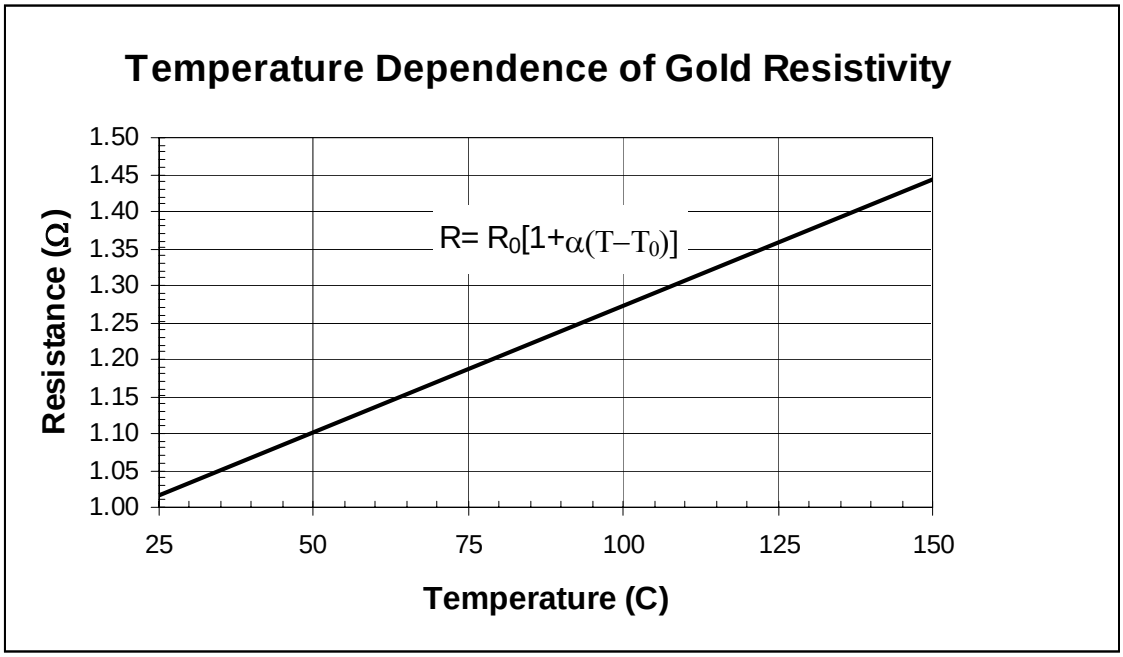

R_0 = Initial value of resistor (1W @ room temperature)
α = Resistivity of gold (3.4E-3/^{o}C)
T = Temperature device heated to
T_0 = Initial temperature=room temperature=20 ^{o}C

http://hyperphysics.phy-astr.gsu.edu/hbase/electric/restmp.html

A7: The mold compound does affect the transmission characteristics of the package. S-parameter measurements were made for a microstrip before and after the mold compound was applied. The comparisons of amplitude and phase for insertion loss are below:

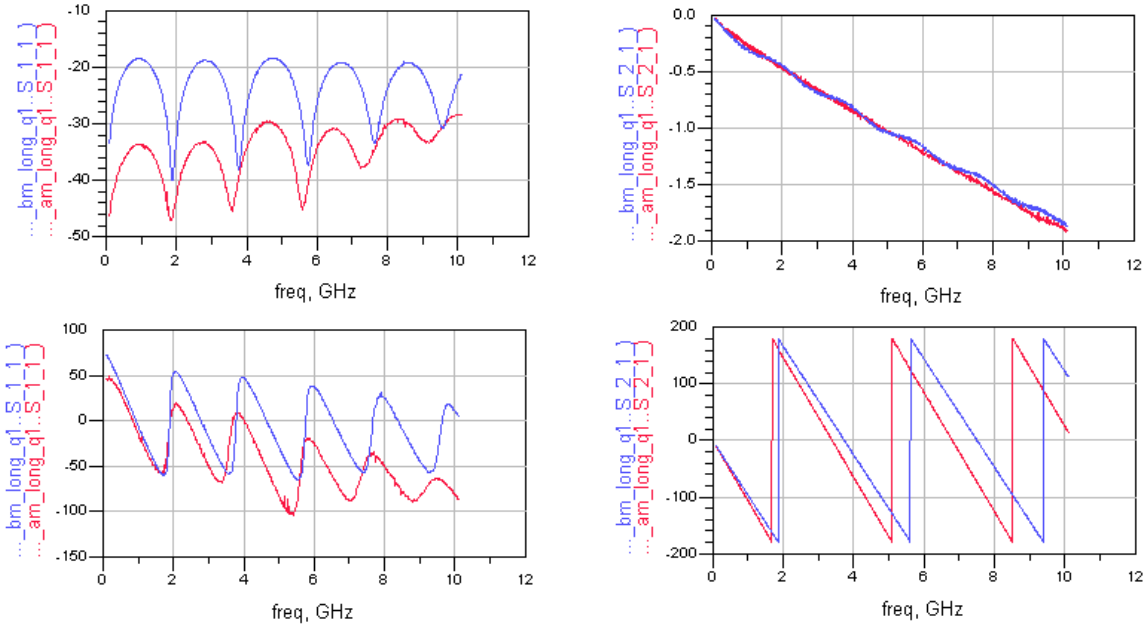

Blue Line = before mold compound
Red Line = after mold compound

© 2007 Amkor Technology, Inc.

A8: In order to generate an electromagnetic field solution, Q3D Extractor employs a combination of the finite element method and the method of moments. In general, the finite element method divides the full problem space into thousands of smaller regions and represents the field in each sub-region (element) with a local function. The method of moments divides up the surface of conductors and dielectrics into many triangles to represent the charges and currents on those surfaces.

The choice of which method to use depends on the quantity being calculated. DC conductor problems are solved using a finite element method (to model current flows within the conductors), while inductance and capacitance problems are solved with the method of moments.

A9: All currents in AC analysis are surface currents. To take this into account, the system computes the surface magnetic field, *H*, such that:

$$H = \frac{1}{\mu_O} \nabla \times A$$

At high frequencies, the magnetic field is tangential to the surface of a good conductor. After solving for the magnetic field, the system computes the surface current density, *K*:

$$K = n \times H$$

and inductance is found using the relationship:

$$L_{ij} = \int_S A_i \bullet K_j \, dV$$

A10: Off diagonal terms are negative. This is a natural consequence of how the terms are arranged (see below). Use the absolute value for mutual capacitance terms.

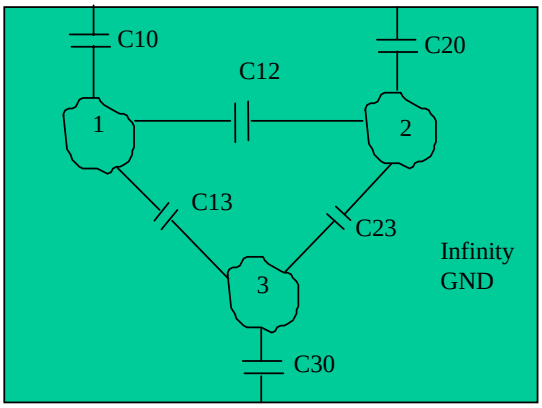

$$Q_1 = (C_{10}+C_{12}+C_{13})V_1 - C_{12}V_2 - C_{13}V_3$$
$$Q_2 = -C_{21}V_1 + (C_{21}+C_{20}+C_{23})V_2 - C_{23}V_3$$
$$Q_3 = -C_{31}V_1 - C_{32}V_2) + (C_{31}+C_{32}+C_{30})V_3$$

Mutual Capacitance Calculation

© 2007 Amkor Technology, Inc.

A11: If the physical length of the package is comparable to Wavelength/10 of the corresponding frequency, the model is valid.

AC solvers compute high frequency asymptotes of inductance and resistance. While external inductance values do not grow with frequency, the resistance values are unbounded and increase with the square root of frequency. The default operating frequency is 100 MHz. The skin depth used by the software is given by the following relationship (for reference, remember that the skin depth in copper (s = 5.8 x 10^7 S/m) at 100 MHz is 6.6 mm):

$$\delta = \sqrt{\frac{2}{\omega \sigma \mu_0 \mu_r}}$$

where:

- ω is the angular frequency, which is equal to $2\pi f$ (*f* is the frequency in hertz)
- σ is the conductor's conductivity in S/m
- μ_r is the conductor's relative permeability. For most metals, $\mu_r = 1$.
- μ_0 is the permeability of free space, which equals 4π x 10^{-7} Wb/Am (or 4π x 10^{-7} H/m).

Thus, given a conductor with thickness ***d***, you can calculate the lower bound of the AC Region by calculating the smallest frequency that produces a skin depth d much smaller (say 3 times smaller) than this thickness. Using the formula for d and the definition of $\omega = 2\pi f$, you have the frequency limit:

$$f \geq \frac{9}{\pi \sigma d^2 \mu_0 \mu_r}$$

A12: Usually customers find it confusing and have a hard time making sense of R12 or cross resistance terms. While R12 is a measure of power dissipated in conductor 2 when current is introduced to conductor1, it simply adds to the power dissipated by the system of conductors due to current induced on neighboring conductors when the primary conductor is driven. Q3D Extractor calculates this number and includes it in the spice subcircuit, but we do not report it. Even though we do not report this number does not mean that it is zero, however, it is very small and omitting this term does not necessarily introduce an error.

© 2007 Amkor Technology, Inc.

A13: The following is an example of the lumped, narrowband, SPICE equivalent of a simulated circuit:

SPICE EQUIVALENT OF THE SIMULATED CIRCUIT

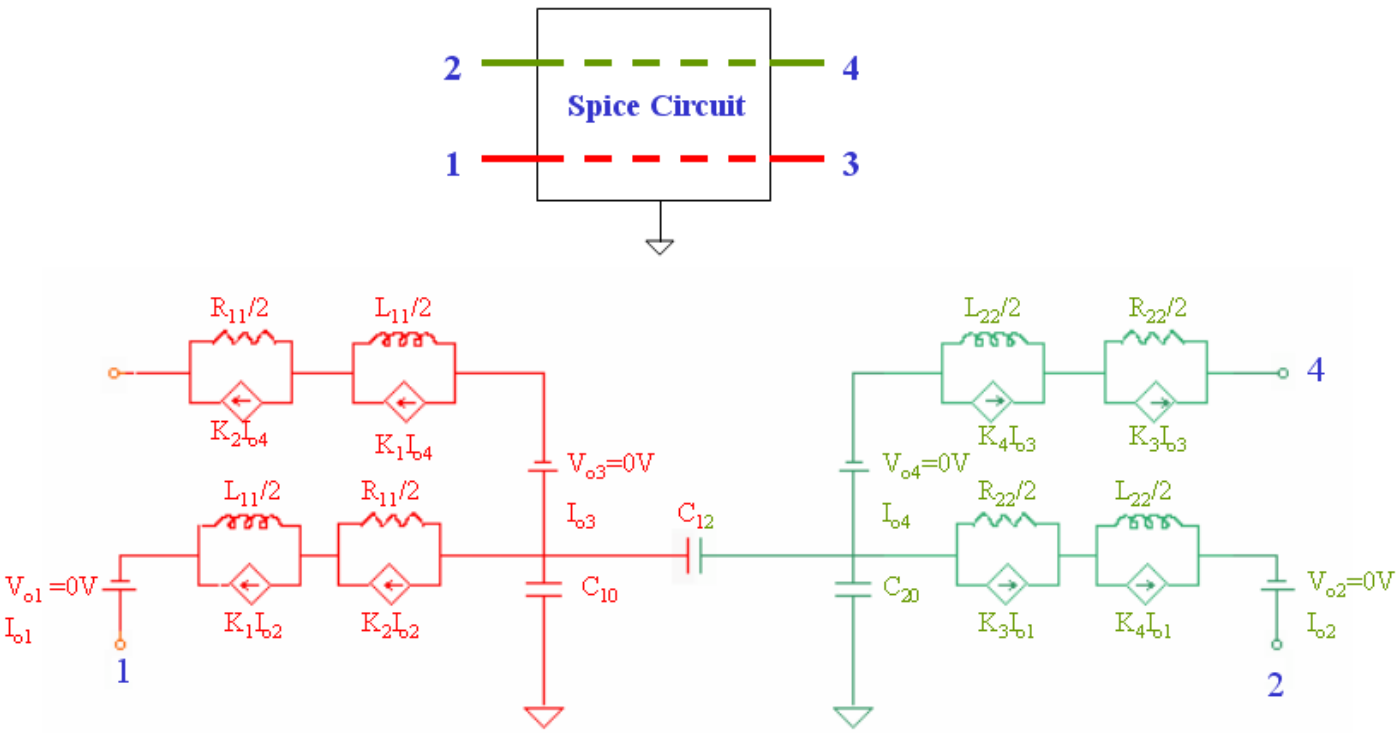

© 2007 Amkor Technology, Inc.