Data Sheet

Metric Quad Flat Pack Packages (MQFP)

Amkor's MQFP packages allow IC packaging engineers and systems designers the flexibility of growing or shrinking IC package size based upon application need. Amkor uses the most up-to-date materials and processes along with advanced equipment, to ensure successful, reliable performance of our IC devices. A complete line of MQFP packages are available to provide security, convenience and success.

Thermal Enhancement

Some designs and applications require an added margin of thermal performance (power). Amkor's easy and cost-effective solution is a heat spreader. This optional embedded thermal aid improves Theta JA by as much as 15% (without external heat sinks or fans) by supplementing the heat dissipation path from the IC chip to the PCB.

Applications

Amkor's MQFP line is adapted to meet the increasing challenges of advanced Digital Signal Processors (DSP), microprocessors, microcontrollers, ASIC, video DAC, PC chip sets, gate arrays, logic, multimedia chip sets and other technologies. These packages fill application needs in consumer, commercial, office, automotive, PC, industrial and other product areas.

Features

- 10 x 10 mm to 32 x 32 mm body size
- 44-240 lead counts
- Broad selection of stamped die pad sizes
- Custom leadframe design available
- Die up and down configurations
- High conductivity copper leadframes
- JEDEC standard compliant package outlines
- Integrated thermal enhancement available with heat spreader
- Fine pitch wire bond capability
- State of the art Pb-free material sets

MQFP

Thermal Performance

Multi-layer PCB

Pkg	Body Size (mm)	Pad Size (mm)	ΘJA (°C/W) by Velocity (LFPM)		
			0	200	500
44 ld	10 x 10	7.4 x 7.4	38.4	32.1	29.4
64 ld	14 x 14	8.9 x 8.9	33.7	27.9	25.5
100 ld	14 x 20	11.0 x 11.0	27.3	23.5	21.6
240 ld	32 x 32	12.7 x 12.7	24.5	21.8	20.5

JEDEC Standard Test Boards

Electrical Performance

Pkg	Body Size (mm)	Lead	Inductance (nH)	Capacitance (pF)	Resistance (mΩ)
44 ld	10 x 10	Longest	1.660	0.322	19.8
44 ld	10 x 10	Shortest	1.460	0.342	17.0
64 ld	14 x 14	Longest	5.92	0.884	123.6
64 ld	14 x 14	Shortest	1.319	0.548	0.164
128 ld	14 x 20	Longest	9.29	1.227	200.0
128 ld	14 x 20	Shortest	1.694	0.501	0.150
208 ld	28 x 28	Longest	9.86	7.945	0.937
208 ld	28 x 28	Shortest	3.723	2.948	0.325
240 ld	32 x 32	Longest	16.84	9.480	217.5
240 ld	32 x 32	Shortest	7.87	1.513	0.543

Simulated Results @ 100 MHz

Reliability Qualification

Amkor devices are assembled in optimized package designs with proven reliable semiconductor materials.

- Moisture Sensitivity Characterization — JEDEC Level 3, 30°C/60% RH, 192 hrs
- PCT — 121°C, 2 atm, 100% RH, 504 hours
- Temp Cycle — -65°C/+150°C, 1000 cycles
- Temp/Humidity — 85°C/85% RH, 1000 hours
- High Temp Storage — 150°C, 1000 hours

Visit Amkor Technology online for locations and to view the most current product information.

Data Sheet

MQFP

Process Highlights

- Die thickness — Target 18-20 mils (13 min to 25 max)
- Wire Bond — Au – 0.8 mil Std; Cu – 1.0 mil PCC Std
- Solder plating — Matte Sn/NiPdAu PPF (limited availability); Sn Pb 85/15
- Lead inspection — Laser/optical
- Marking — Laser
- Pack/ship options — Bar code, dry pack

Test Services

- Program generation/conversion
- Product engineering
- Wafer sort
- 256 pin x 20 MHz test system available
- -55°C to +165°C test available
- Burn-in capabilities

Shipping

- JEDEC outline CS-004 low profile tray
  - Bakable (125°C and 150°C)
  - Non-bakable

Cross-sections MQFP

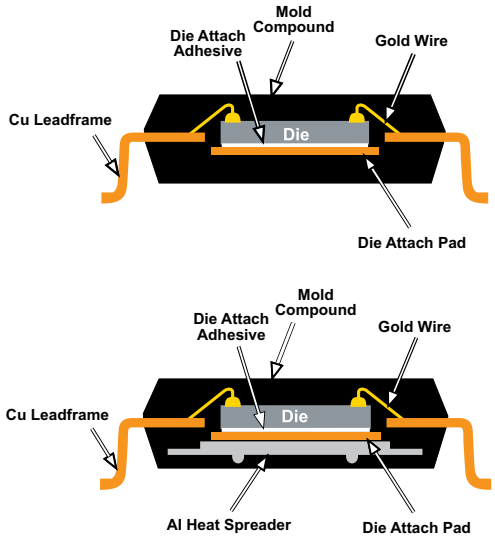

MQFP w/Drop-in Al Heat Spreader

Configuration Options

MQFP Nominal Package Dimensions (mm)

Lead Count	Body Size	Body Thickness	Lead Form	Standoff	Tip-to-Tip	JEDEC	Tray Matrix	Units Per Tray
44/52/64	10 x 10	2.00	1.60	0.15	13.2	MS-022	6 x 16	96
44/52/64	10 x 10	2.00	1.95	0.15	13.9	MO-112	6 x 16	96
52/64/80/100	14 x 14	2.00	1.60	0.15	17.2	MS-022	6 x 14	84
52/64/80/100	14 x 14	2.67	1.60	0.15	17.2	MS-022	6 x 14	84
52/64/80/100	14 x 14	2.67	1.95	0.15	17.9	MO-112	6 x 14	84
64/80/100/128	14 x 20	2.71	1.60	0.33	17.2 x 23.2	MS-022	6 x 11	66
64/80/100/128	14 x 20	2.71	1.95	0.23	17.9 x 23.9	MO-112	6 x 11	66
120/128/144/160/208/256	28 x 28	3.37	1.30	0.13	30.6	MS-029	3 x 8	24
120/128/144/160/208/256	28 x 28	3.37	1.30	0.33	30.6	MS-029	3 x 8	24
120/128/144/160/208/256	28 x 28	3.37	1.60	0.33	31.2	MS-022	3 x 8	24
240	32 x 32	3.40	1.30	0.38	34.6	MS-029	3 x 8	24
240	32 x 32	3.40	1.30	0.32	34.6	MS-029	3 x 8	24

Visit Amkor Technology online for locations and to view the most current product information.

Amkor Technology®

DS250I
Rev Date: 7/12